Contents

4 Channels, Bnc Interface Unit, Model 301 39

12 Channels, Bnc Interface Unit, Model 300 40

11 Channels, Switch Interface Unit, Model 302 41

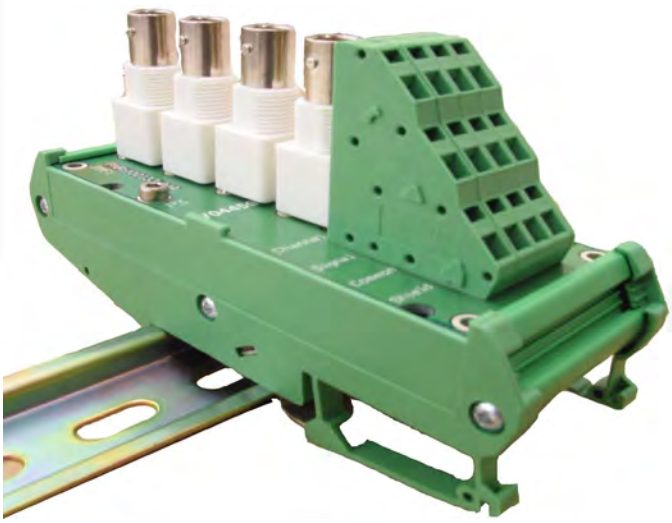

4 Channels, Bnc Interface Unit, Model 301

Main Characteristics

- 4 differential channels
- Compatible with all 2 wires sensor
- Din rail mounted (TS35 and TS32)
- Isolated BNC output
- Spring cage terminal block input
- PCB grounding plate connected to din rail

Description

The VibraSens BNC interface unit is a din rail mounted module for permanently installed vibration sensors. Pigtails (signal, common and shield) sensor cables are attached to spring cage terminal block. Data collection equipment with the sensor excitation power are mounted to BNC jack connectors. BNC interface unit do not supply sensor excitation. PCB grounding plates are connected to din rail which greatly improve EMC. VibraSens offers enclosure for 1, 2 or 4 modules but it is not mandatory as the module can take place on any TS35/TS32 Din rail.

Typical applications

BNC interface module is installed in a convenient centralized location away from noisy or unsafe environment where portable collector can record the sensor reading. Simply connect a data collector with sensor excitation power to the BNC jack of the sensor channel of interest to access that sensor's measurement signal

Ordering information

To order, specify model number :

301.11 BNC Interface unit, Din rail mounted

Popular model (in stock) : 301.11

Specifications

Electrical

Channels 4
2 Wire sensors ..... ©ICP Piezoelectric accelerometer
..... Velocimeter
..... Eddy current proximity sensor
Maximum Voltage 240V
Maximum Current 5A

Physical

Input ..... 3-pole spring cage terminal
..... AWG 24-14 / 0.2 - 1.5 mm^2
Output ..... Isolated BNC
Dimensions ..... see fig 1
Weight gr (oz) ..... 120 gr (4.3 Oz)
Material, Din rail profil ..... PVC Green (UL94)
Material, terminal ..... Polyamid green

Environmental

Temperature :
Operating continous ..... -20 to +55 °C (-4 to 130 °F)

Ratings

Flammability rating ..... UL 94 VO

Drawings

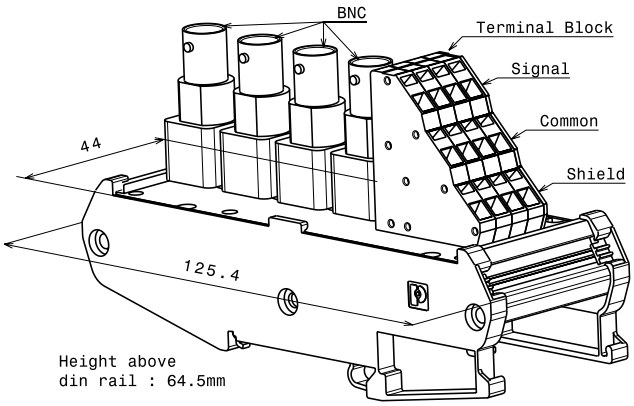

Fig 1 : Outline drawing, model 301.11

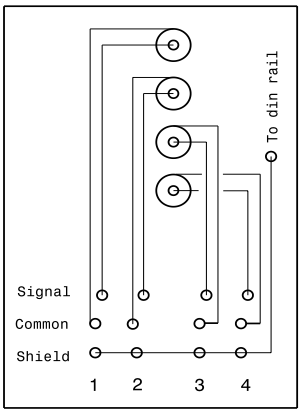

Fig 2 : Wiring